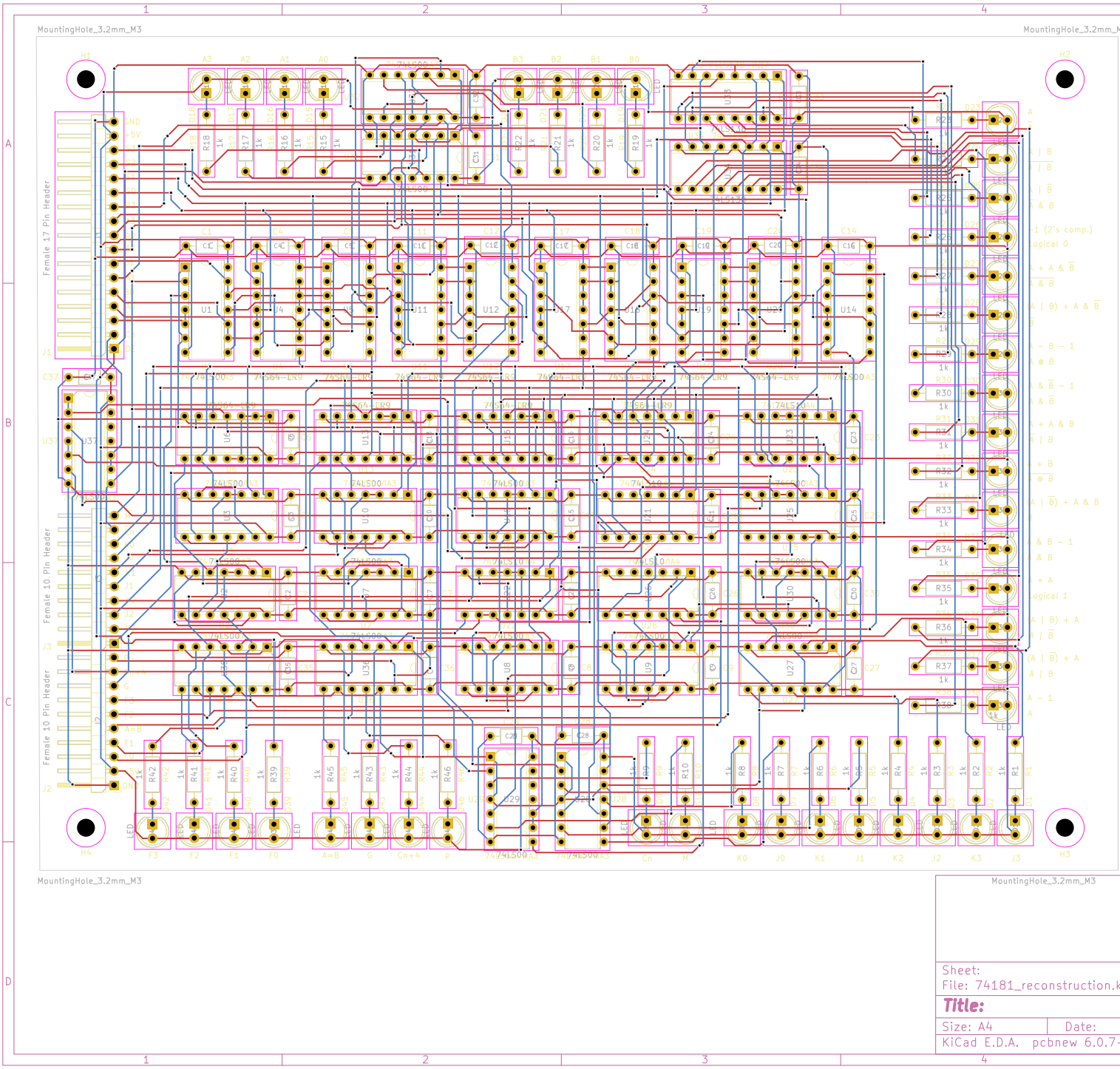

Sheet:
File: 74181_reconstruction.k

Title:

Size: A4 | Date:

KiCad E.D.A. pcbnew 6.0.7-